HAICHEN
海 辰

宁波海辰思博信息科技有限公司
Ningbo Haichen Servo Information Technology Co.,Ltd.

地址：中国浙江宁波北仑兴岙工业区
Add：Xing Ao Industry Park Beilun Ningbo China
电话/Tel：0086-574-87762980
传真/Fax：0086-574-87768570
E-mail：sales@china-haichen.com
https：//www.haichen-machine.com/

HAICHEN
海 辰

让制造 更智能

SPECIAL MECHANICAL ARM FOR INJECTION MOLDING MACHINE AND AUTOMATIC PRODUCTION LINE FOR NON STANDARD

注塑机专用机械手臂及非标自动化流水线

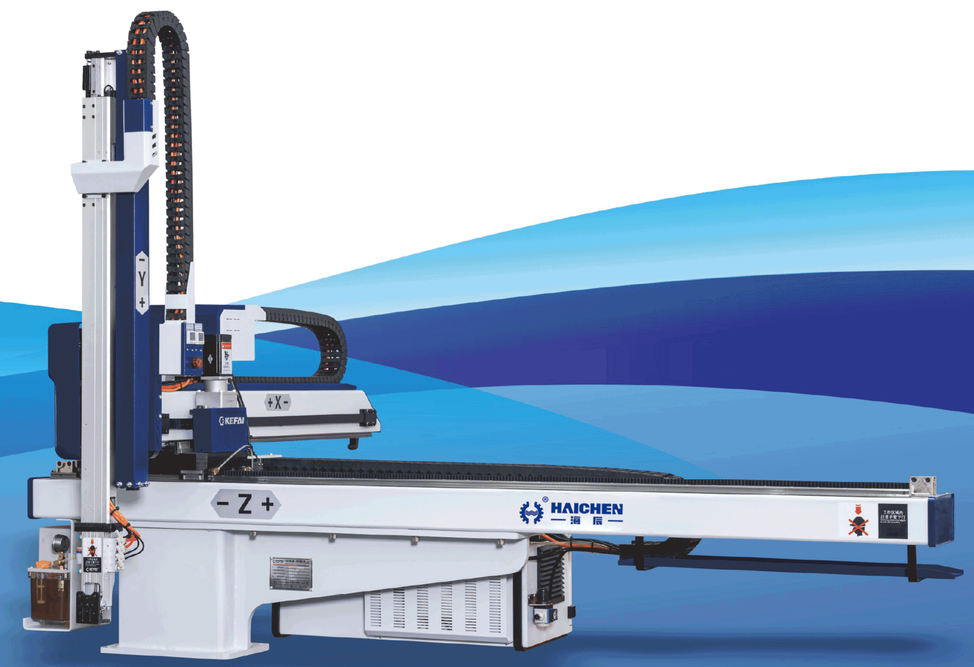

宁波海辰思博信息科技有限公司
Ningbo Haichen Servo Information Technology Co.,Ltd.

小斜臂机械手

SMALL slanting arm robot

适用注塑机50T–180T SUITABLE I.M.M.

产品特征:

- 配置灵活，易于扩展
- 设备结构简单，能效高
- 举重若轻，便捷高效、操作简单快捷

Features:

- Flexible configuration, easy to expand
- Equipment with simple structure, high energy efficiency
- Weight is light, convenient and efficient, simple and fast operation

适用注塑机 SUITABLE I.M.M.

50T–180T

主要规格及外型尺寸 Main Specification

机型 MODEL	手臂型式 Type	适用注塑机 SUITABLE I.M.M.	行程 stroke 上下 Vertical（有效）	行程 stroke 前后 Crosswise（最大）	行程 stroke 前后 Crosswise（有效）	旋出角度 Swing angle	爪旋角度 Gripper rotation angle	最大荷重(含治具) Max load (Inududes gripper)	最小取出时间 Minimun take out time	驱动方式 Method	工作气压 Working Air pressure	空气消耗量 Air Consumption	最大所要电力 The biggest power	最大净重（约） The largest net weight
		ton	mm	mm	mm			Kg	sec		Kgf/cm²	NL/cycle		Kg
X–550(V)	单段 Single–Stage	50~150	550	390	120	50~90	90	2	2.1	气压 Pneumatic	5~7	7.6	单相(Singlel–phase) AC220V 1A	46.9
X–650(V)		100~180	650		120				2.2			7.7		47.5
X–550PR		100~180	P:550 R:550	450	P:170 R:120				1			12		63.9
X–650PR		100~180	P:650 R:650		P:170 R:120				1			12		64.4

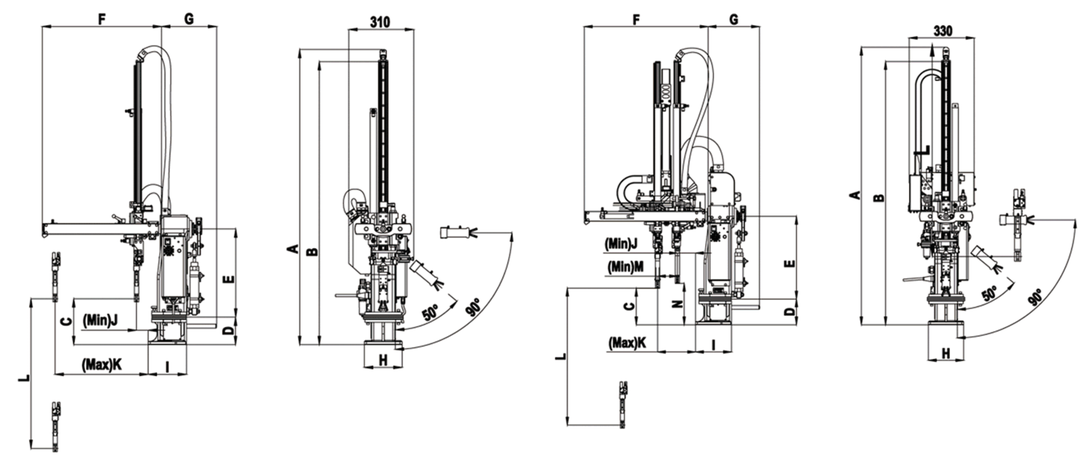

机型MODEL	A	B	C	D	E	F	G	H	I	J	K	L	M	N
X–550(V)	1300	1230	200	130	417	550	260	178	181	55	390	550	/	/
X–650(V)	1400	1330	200			550				55	390	650	/	/
X–550PR	1300	1230	185			620				90	550	550	80	200
X–650PR	1400	1330	185			620				90	550	650	80	200

悬挂式伺服机械手

FULL servo robot

适用注塑机60T–200T SUITABLE I.M.M

产品特征：

- XYZ轴均采用AC伺服马达驱动，XYZ轴全采用高刚性线性导轨。
- 机械手横行梁采用无缝管，调质(热）处理后，经精密CNC设备加工，具有变形率小，机器运行更加平稳，使用寿命长等特点。
- 机械手标配免维护自动润滑系统，避免人员保养设备爬上机器的危险性，延长整机使用寿命。

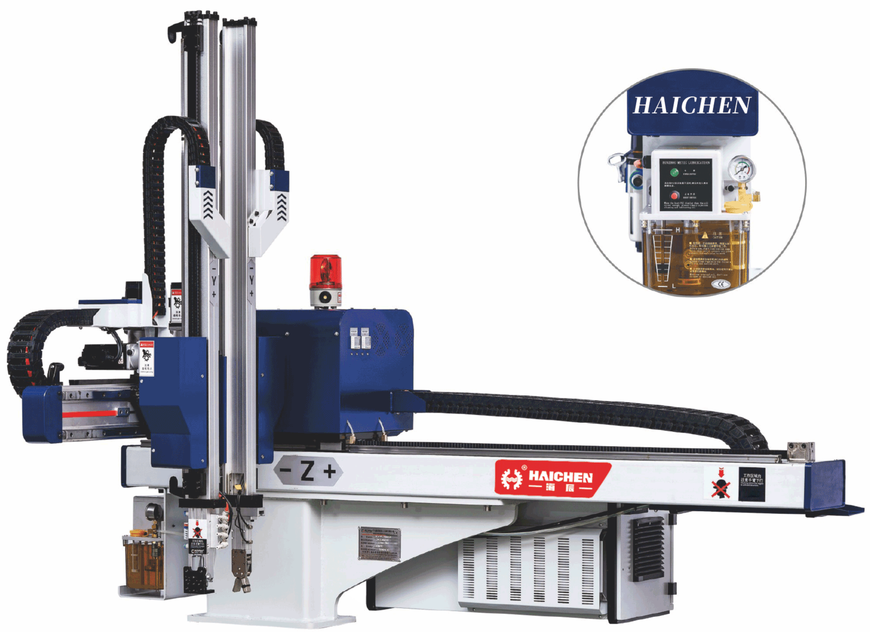

Features:

- X Y Z Axes are driven by AC servo motor, X Y Z axes all use highly rigid linear guides.
- Robot traverse beam with seamless tubes, After tempering treatment, Machined by precision CNC machines, It is characterised by a low deformation rate, smoother robot operation and a long service life.
- Manipulator with maintenance–free automatic lubrication system as standard , Avoiding the danger of personnel maintaining the equipment climbing on the machine and extending the life of the whole machine.

HAICHEN 海辰

Ningbo Haichen Servo Information Technology Co.,Ltd

实际有效行程 / ACTUAL EFFECTIVE TRAVEL

曲 臂 Style	机型 MODEL	手臂形式 Type	适用注塑机 Suitable I.M.M.	有效行程 Stroke 横行 Z (mm)	上下 Y (mm)	引拔 X (mm)	侧资角度 C Axis Posture	最大负重 Max load 单位:kg	最小取出时间 Minimum take out time	工作气压 Working air Pressure	驱动方式 Drive Way
Double-curved arm	KAW-700D5	单段式 Single paragraph	60-200T	1300	700	260	90°	3	1.2 Sec	0.5-0.8 Kgf/cm²	伺服电机 Servo motor
	KAW-800D5			1300	800	360	90°	3	1.2 Sec		
Single-curved arm	KAW-700D3	单段式 Single paragraph	60-200T	1300	700	520	90°	3	1.2 Sec	0.5-0.8 Kgf/cm²	伺服电机 Servo motor
	KAW-800D3			1300	800	620	90°	3	1.2 Sec		

外形尺寸 / OUTLINE SIZE

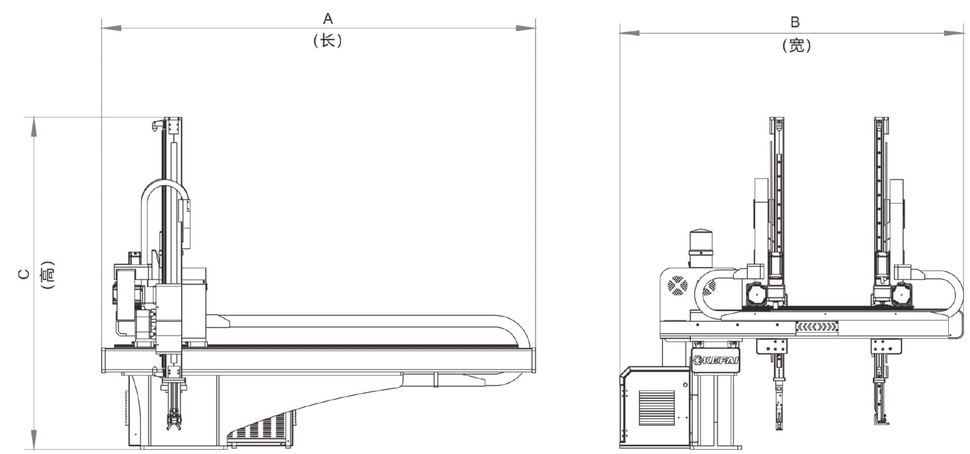

曲 臂 Style	机型 MODEL	机器外形尺寸A（长）单位：mm Robot Dimensions size A (Length)	机器外形尺寸B（宽）单位：mm Robot Dimensions size B (Width)	机器外形尺寸C（高）单位：mm Robot Dimensions size C (Height)
Double-curved arm	KAW-700D5	1850	1260	1460
	KAW-800D5	1850	1360	1560
Single-curved arm	KAW-700D3	1850	1260	1460
	KAW-800D3	1850	1360	1560

注：因改良等原因，规格及外观有所变更时，不在另行通知，敬请谅解。
Note: for improvement and other reasons, specifications and appearance changes, without notice, please understand.
Remark: Optional extras-Single- curved arm

悬挂式伺服机械手

FULL servo robot

适用注塑机200T–320T SUITABLE I.M.M

产品特征:

- XYZ轴均采用AC伺服马达驱动，XYZ轴全采用高刚性线性导轨。
- 机械手横行梁采用无缝管，调质(热）处理后，经精密CNC设备加工，具有变形率小，机器运行更加平稳，使用寿命长等特点。
- 机械手标配免维护自动润滑系统，避免人员保养设备爬上机器的危险性，延长整机使用寿命。
- 手臂采用行业独有90度互锁结构，三线轨保持平衡，比传统平行接触速度更快，刚性更强，取件速度更快，缩短生产周期。

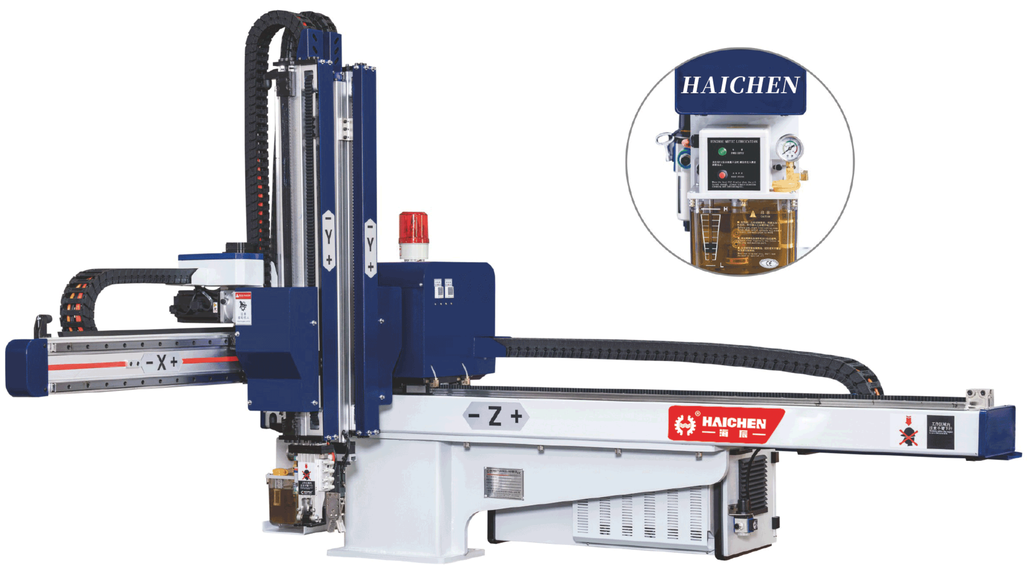

Features:

- X Y Z Axes are driven by AC servo motor, X Y Z axes all use highly rigid linear guides.
- Robot traverse beam with seamless tubes, After tempering treatment, Machined by precision CNC machines, It is characterised by a low deformation rate, smoother robot operation and a long service life.
- Manipulator with maintenance–free automatic lubrication system as standard , Avoiding the danger of personnel maintaining the equipment climbing on the machine and extending the life of the whole machine.
- The arm adopts the unique 90–degree interlock structure design, three–track balance, Faster and more rigid than conventional parallel contact, faster pick–up and shorter production cycle times .

实际有效行程 / ACTUAL EFFECTIVE TRAVEL

曲 臂 Style	机型 MODEL	手臂形式 Type	适用注塑机 Suitable I.M.M.	有效行程 Stroke 横行 Z (mm)	上下 Y (mm)	引拔 X (mm)	侧资角度 C Axis Posture	最大负重 Max load 单位:kg	最小取出时间 Minimum take out time	工作气压 Working air Pressure	驱动方式 Drive Way
Double-curved arm	KAW-850S5	双段式 Double paragraph	200-320T	1450	850	390	90°	5	1.3 Sec	0.5-0.8 Kgf/cm²	伺服电机 Servo motor
	KAW-950S5			1450	950	450	90°	5	1.3 Sec		
	KAW-110S5			1750	1100	550	90°	5	1.3 Sec		
Single-curved arm	KAW-850S3	双段式 Double paragraph	200-320T	1450	850	720	90°	5	1.3 Sec	0.5-0.8 Kgf/cm²	伺服电机 Servo motor
	KAW-950S3			1450	950	850	90°	5	1.3 Sec		
	KAW-110S3			1750	1100	820	90°	5	1.3 Sec		

外形尺寸 / OUTLINE SIZE

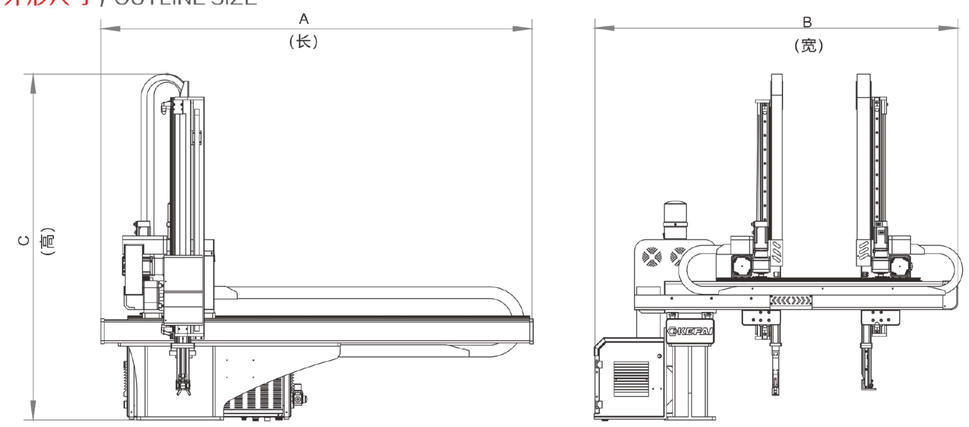

曲 臂 Style	机型 MODEL	机器外形尺寸A（长）单位：mm Robot Dimensions size A (Length)	机器外形尺寸B（宽）单位：mm Robot Dimensions size B (Width)	机器外形尺寸C（高）单位：mm Robot Dimensions size C (Height)
Double-curved arm	KAW-850S5	2010	1350	1520
	KAW-950S5	2010	1450	1620
	KAW-1100S5	2310	1550	1720
Single-curved arm	KAW-850S3	2010	1600	1385
	KAW-950S3	2010	1700	1485
	KAW-1100S3	2310	1700	1585

注：因改良等原因，规格及外观有所变更时，不在另行通知，敬请谅解。
Note: for improvement and other reasons, specifications and appearance changes, without notice, please understand.
Remark: Optional extras-Single- curved arm

牛头式伺服机械手

FULL servo robot

适用注塑机320T–680T SUITABLE I.M.M

产品特征:

- X Y Z均采用AC伺服马达驱动，X Y Z 全采用高刚性线性导轨。
- 机器横行方管采用无缝管，调质处理后，精密CNC加工，变形率小，机器运行更加平稳，滑块使用寿命长。
- 机器标配，免维护自动润滑系统，避免人员保养设备爬上机器的危险性，延长整机使用寿命。
- 手臂采用行业独有90度互锁结构，三线轨保持平衡，比传统平行接触速度更快，刚性更强，取件速度更快，缩短生产周期。

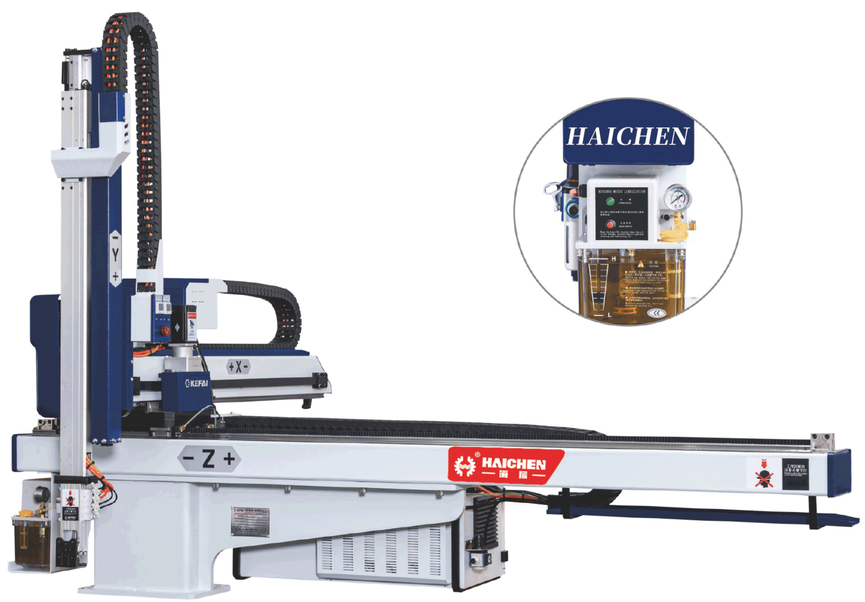

Features:

- X Y Z are driven by AC servo motor.
- The machine transverse square tube used seamless tube, conditioning treatment, precision CNC machining, deformation rate is small, the machine runs more stable, slider long life.
- Machine standard, maintenance–free automatic lubrication system, to avoid the danger of personnel maintenance equipment climbing the machine, extend the life of the machine.
- The arm adopts the unique 90–degree interlock structure, three–track balance, faster than the traditional parallel contact speed, more rigid, faster pick–up speed, shorten the production cycle.

实际有效行程 / ACTUAL EFFECTIVE TRAVEL

曲 臂 Style	机型 MODEL	手臂形式 Type	适用注塑机 Suitable I.M.M.	有效行程 Stroke 横行 Z (mm)	上下 Y (mm)	引拔 X (mm)	侧资角度 C Axis Posture	最大负重 Max load 单位:kg	最小取出时间 Minimum take out time	工作气压 Working air Pressure	驱动方式 Drive Way
Three-axis arm	KAW-1000NT	双段式 Double paragraph	320-680T	1450	1000	660	90°	6	1.3 Sec	0.5-0.8 Kgf/cm²	伺服电机 Servo motor
	KAW-1200NT			1750	1200	860	90°	6	1.3 Sec		
	KAW-1500NT			1950	1500	1160	90°	6	1.3 Sec		
Four-axis arm	KAW-1000NT	双段式 Double paragraph	320-680T	1450	1000	660	180°	15	1.5 Sec	0.5-0.8 Kgf/cm²	伺服电机 Servo motor
	KAW-1200NT			1750	1200	860	180°	15	1.5 Sec		
	KAW-1500NT			1950	1500	1160	180°	15	1.5 Sec		

外形尺寸 / OUTLINE SIZE

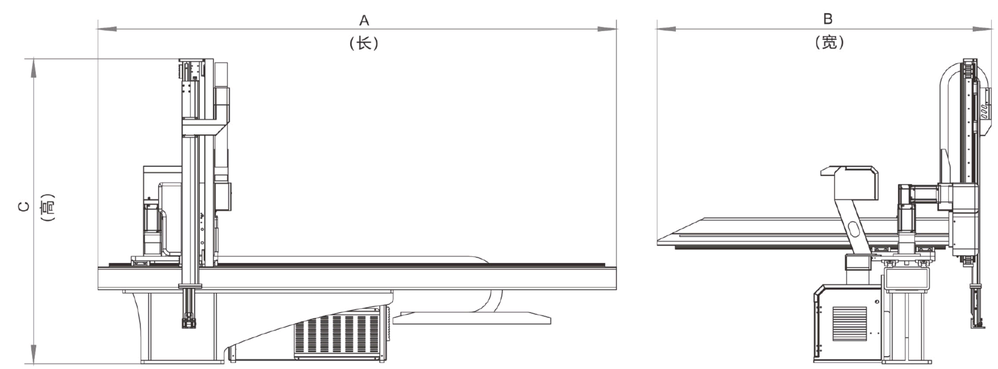

机型 MODEL	机器外形尺寸A（长）单位：mm Robot Dimensions size A (Length)	机器外形尺寸B（宽）单位：mm Robot Dimensions size B (Width)	机器外形尺寸C（高）单位：mm Robot Dimensions size C (Height)
KAW-1000NT	2010	1300	1300
KAW-1200NT	2310	1400	1500
KAW-1500NT	2510	1600	1700

注：因改良等原因，规格及外观有所变更时，不在另行通知，敬请谅解。
Note: for improvement and other reasons, specifications and appearance changes, without notice, please understand.
Remark: Optional extras-Four-axis arm

牛头式伺服机械手

FULL servo robot

适用注塑机320T–680T SUITABLE I.M.M

产品特征：

- XYZ轴均采用AC伺服马达驱动，XYZ轴全采用高刚性线性导轨。
- 机器横行方管采用无缝管，调质(热）处理后，经精密CNC设备加工，具有变形率小，机器运行更加平稳，使用寿命长等特点。
- 机械手标配免维护自动润滑系统，避免人员保养设备爬上机器的危险性，延长整机使用寿命。
- 手臂采用行业独有90度互锁结构，三线轨保持平衡，比传统平行接触速度更快，刚性更强，取件速度更快，缩短生产周期。
- 专为厂房高度受限开发，手臂结构有传统的双节改为三节设计，整体高度变矮，取出速度更快。

Features:

- X Y Z Axes are driven by AC servo motor, X Y Z axes all use highly rigid linear guides.
- The machine adopts seamless tubes, which are processed by precision CNC equipment after quenching and tempering (heat) treatment. They have the characteristics of low deformation rate, more stable machine operation, and long service life.
- Manipulator with maintenance–free automatic lubrication system as standard , Avoiding the danger of personnel maintaining the equipment climbing on the machine and extending the life of the whole machine.
- The arm adopts the unique 90–degree interlock structure design, three–track balance, Faster and more rigid than conventional parallel contact, faster pick–up and shorter production cycle times .
- Developed specifically for the restricted height of the plant, the arm structure has been changed from a traditional two–section to a three–section design, resulting in a shorter overall height and faster take–out.

实际有效行程 / ACTUAL EFFECTIVE TRAVEL

机型 MODEL	手臂形式 Type	适用注塑机 Suitable I.M.M.	有效行程 Stroke			侧资角度 C Axis Posture	最大负重 Max load 单位:kg	最小取出时间 Minimum take out time	工作气压 Working air Pressure	驱动方式 Drive Way
			横行 Z (mm)	上下 Y (mm)	引拔 X (mm)					
KAW-1200NT3	三段式 Three section type	320-680T	1720	1200	630	90°	5	5Sec	0.5-0.8 Kgf/cm²	伺服电机 Servo motor
KAW-1500NT3			1850	1500	830	90°	6	5Sec		

外形尺寸 / OUTLINE SIZE

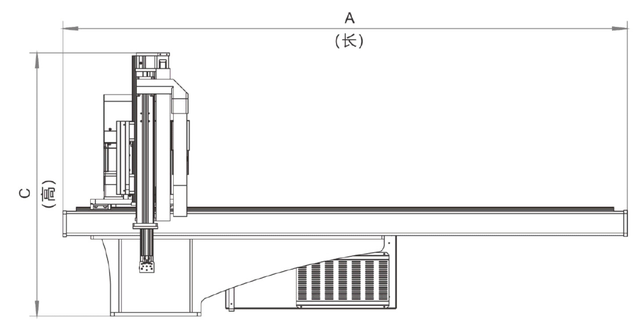

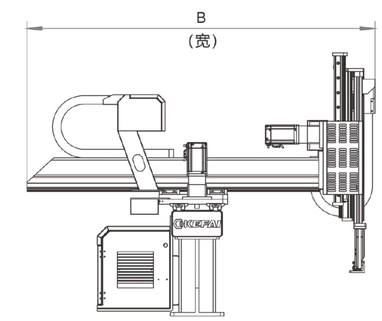

机型 MODEL	机器外形尺寸A（长）单位：mm Robot Dimensions size A (Length)	机器外形尺寸B（宽）单位：mm Robot Dimensions size B (Width)	机器外形尺寸C（高）单位：mm Robot Dimensions size C (Height)
KAW-1200NT3	2310	1400	1250
KAW-1500NT3	2510	1600	1500

注：因改良等原因，规格及外观有所变更时，不在另行通知，敬请谅解。
Note: for improvement and other reasons, specifications and appearance changes, without notice, please understand.

牛头式伺服机械手

FULL servo robot

适用注塑机800T–1200T SUITABLE I.M.M

产品特征：

- X Y Z A 均采用AC伺服马达驱动，X Y Z 全采用高刚性线性导轨。
- 调质处理后，精密CNC加工，变形率小，机器运行更加平稳，滑块使用寿命长。
- 机器标配，免维护自动润滑系统，避免人员保养设备爬上机器的危险性，延长整机使用寿命。
- 手臂采用行业独有90度互锁结构，三线轨保持平衡，比传统平行接触速度更快，刚性更强，取件速度更快，缩短生产周期。

Features:

- X Y Z A are driven by AC servo motor.
- Conditioning treatment, precision CNC machining, deformation rate is small, the machine runs more stable, slider long life.
- Machine standard, maintenance–free automatic lubrication system, to avoid the danger of personnel maintenance equipment climbing the machine, extend the life of the machine.
- The arm adopts the unique 90–degree interlock structure, three–track balance, faster than the traditional parallel contact speed, more rigid, faster pick–up speed, shorten the production cycle.

实际有效行程 / ACTUAL EFFECTIVE TRAVEL

机型 MODEL	手臂形式 Type	适用注塑机 Suitable I.M.M.	有效行程 Stroke			侧资角度 C Axis Posture	最大负重 Max load 单位:kg	最小取出时间 Minimum take out time	工作气压 Working air Pressure	驱动方式 Drive Way
			横行 Z (mm)	上下 Y (mm)	引拔 X (mm)					
KAW-1600NT	双段式 Double paragraph	800-1200T	2015	1600	1300	180°	30	2.6Sec	0.5-0.8 Kgf/cm²	伺服电机 Servo motor
KAW-1800NT			2415	2100	1600	180°	30	2.6Sec		

外形尺寸 / OUTLINE SIZE

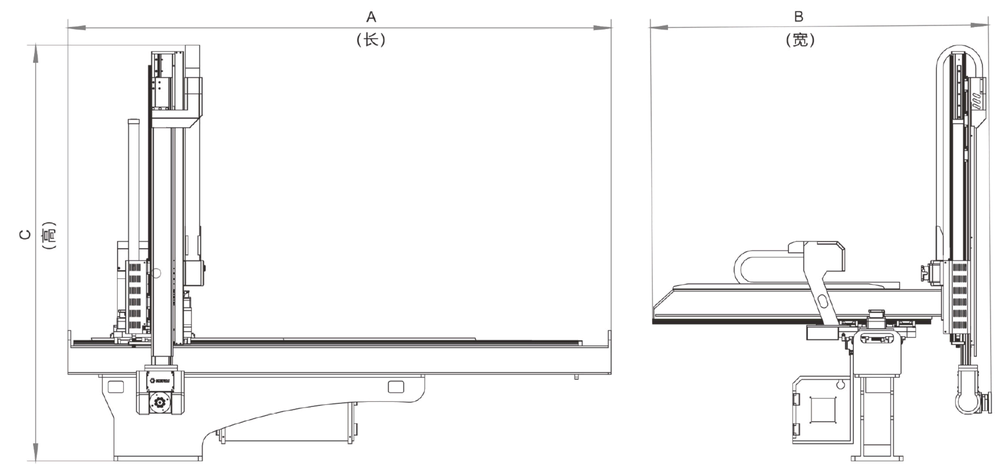

机型 MODEL	机器外形尺寸A（长）单位：mm Robot Dimensions size A (Length)	机器外形尺寸B（宽）单位：mm Robot Dimensions size B (Width)	机器外形尺寸C（高）单位：mm Robot Dimensions size C (Height)
KAW-1600NT	2830	2270	2250
KAW-1800NT	3230	2570	2550

注：因改良等原因，规格及外观有所变更时，不在另行通知，敬请谅解。
Note: for improvement and other reasons, specifications and appearance changes, without notice, please understand.

牛头式伺服机械手

FULL servo robot

适用注塑机1300T–1800T SUITABLE I.M.M

产品特征：

- XYZA 均采用AC伺服马达驱动，XYZ 全采用高刚性线性导轨。
- 调质处理后，精密CNC加工，变形率小，机器运行更加平稳，滑块使用寿命长。
- 机器标配，免维护自动润滑系统，避免人员保养设备爬上机器的危险性，延长整机使用寿命。
- 手臂采用行业独有90度互锁结构，三线轨保持平衡，比传统平行接触速度更快，刚性更强，取件速度更快，缩短生产周期。

Features:

- X Y Z A are driven by AC servo motor.
- Conditioning treatment, precision CNC machining, deformation rate is small, the machine runs more stable, slider long life.
- Machine standard, maintenance–free automatic lubrication system, to avoid the danger of personnel maintenance equipment climbing the machine, extend the life of the machine.
- The arm adopts the unique 90–degree interlock structure, three–track balance, faster than the traditional parallel contact speed, more rigid, faster pick–up speed, shorten the production cycle.

HAICHEN 海辰

Ningbo Haichen Servo Information
Technology Co.,Ltd

实际有效行程 / ACTUAL EFFECTIVE TRAVEL

机型 MODEL	手臂形式 Type	适用注塑机 Suitable I.M.M.	有效行程 Stroke 横行 Z (mm)	上下 Y (mm)	引拔 X (mm)	侧资角度 C Axis Posture	最大负重 Max load 单位:kg	最小取出时间 Minimum take out time	工作气压 Working air Pressure	驱动方式 Drive Way
KAW-2000NT	双段式 Double paragraph	1300-1800T	2515	2000	1700	180°	30	3Sec	0.5-0.8 Kgf/cm²	伺服电机 Servo motor
KAW-2200NT			2815	2200	1900	180°	30	3Sec		

外形尺寸 / OUTLINE SIZE

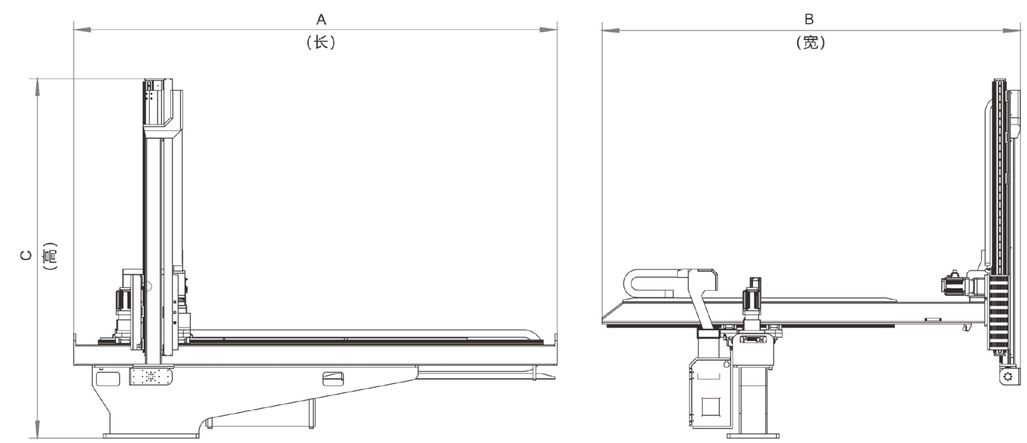

机型 MODEL	机器外形尺寸A（长）单位：mm Robot Dimensions size A (Length)	机器外形尺寸B（宽）单位：mm Robot Dimensions size B (Width)	机器外形尺寸C（高）单位：mm Robot Dimensions size C (Height)
KAW-2000NT	3530	2750	2600
KAW-2200NT	3830	3050	2800

注：因改良等原因，规格及外观有所变更时，不在另行通知，敬请谅解。
Note: for improvement and other reasons, specifications and appearance changes, without notice, please understand.